ORBITAL WELDING MACHINE OWM

Precision welding technology for the highest quality standards

The Stirtec Orbital Welding Machine enables the production of high-strength, precise, and repeatable weld joints. Using the innovative Friction Stir Welding process, materials are joined in the solid state without melting the base material. This results in superior weld quality, excellent mechanical properties, and minimal distortion.

The process offers excellent energy efficiency, low operating costs, and consistently high product quality, making it an ideal choice for modern industrial production.

- high-stiffness stationary frame-based machine
- automatic force-locking pipe clamping system without pipe indentation
- position, force and hybrid position/force control modes
- fully automatic end-hole management without manual operator intervention
- integrated preheating capability (optional)
- integrated seam tracking capability (optional)
- closed-loop spindle and tool cooling
- shielding gas supply at the tool (optional)

MACHINE INFORMATION	
machine dimensions (approx.)	4,200 x 3,200 x 2,650 mm
number of axes	5G
FSW WELDING AND PROCESS DATA	
max. axial welding force	150 kN
max. radial process force	80 kN
max. spindle torque	1,800 Nm
max. welding speed	600 mm/min
rapid traverse speed	up to 1.2 rpm
continuous orbital rotation	> 400 °
WORKPIECE CAPACITY	
standard pipe diameter range	NPS 8“ – 12“ (219.1 – 323.9 mm), adaptable to project-specific pipe diameters
wall thickness range	6.0 – 25.4 mm (0.24 – 1.00“)
pipe length (per side)	400 mm to > 12 m (15.7“ to > 39.4 ft)
max. coating thickness	100 mm
min. coating cutback	300 mm from the pipe joint on each side

STIRTEC

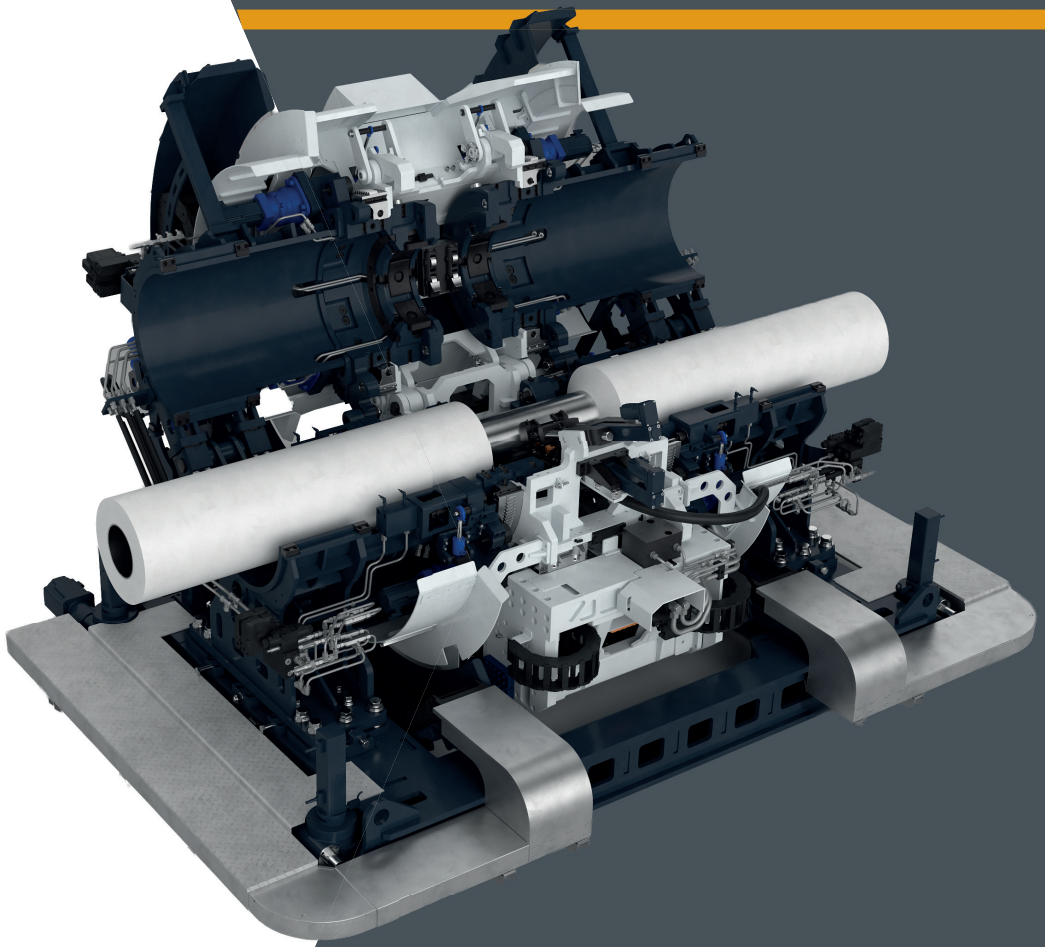

- suitable for carbon steels, stainless steels, aluminium alloys, copper alloys and other metallic alloys and for coated and uncoated pipes
- fully openable split-shell design for axial and radial (front) pipe loading
- integrated frame lifting system for automatic adaptation to different pipe centreline heights